JCT825FH 25A SCR

Rev.A.1.1

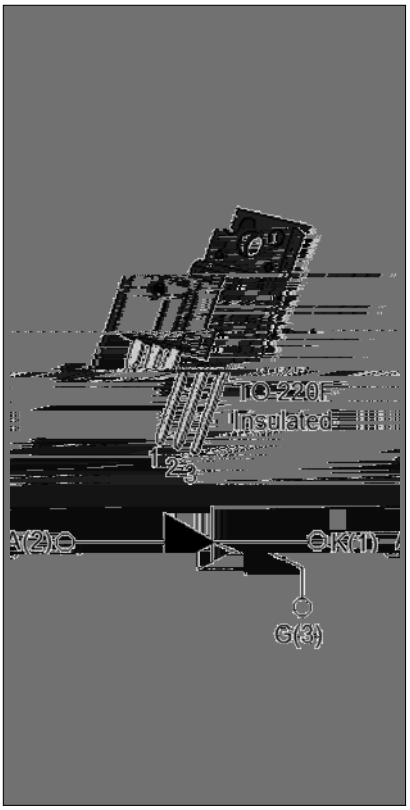

Parameter	Symbol	Value	Unit
≤			
≤			
×			

Symbol	Test Condition	Value			Unit
		MIN.	TYP.	MAX.	
		8			

Symbol	Parameter		Value(MAX.)	Unit

Symbol	Parameter	Value	Unit

FIG.1:

Order code	Voltage V_{DRM}/V_{RRM} (V)	IGT(mA)	Package	Base qty. (pcs)	Delivery mode
JCT825FH	800	20	TO-220F(Ins)	50	Tube
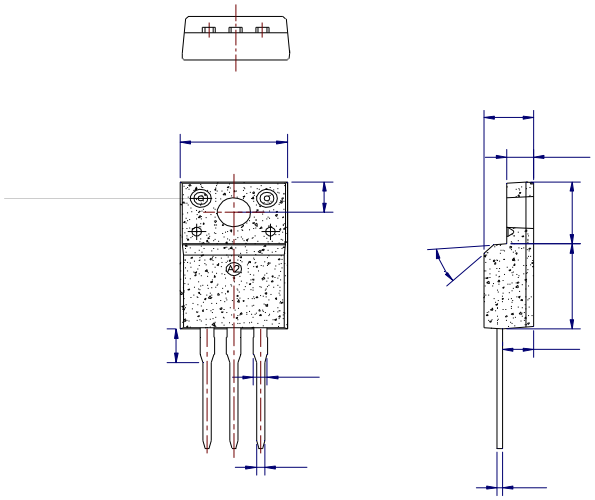
Document Revision History