-67) % $ 75,$&

5HY $

^ Z/Wd/KEW

7KH -67) % WULDF LV VXLWDEOH IRU JHQHUDO SXUSRVH $& VZLWFKLQJ ,W FDQ EH XVHG DV DQ 21 2)) IXQFWLRQ LQ DSSOLFDWLRQV VXFK DV KHDWLQJ UHJXODWLRQ LQGXFWLRQ PRWRU VWDUWLQJ FLUFXLWV RU IRU SKDVH FRQWURO RSHUDWLRQ LQ OLJKW GLPPHUV PRWRU VSHHG FRQWUROOHUV %\ XVLQJ DQ H[WHUQDO SODVWLF SDFNDJH WKH -67) % SURYLGHV D UDWHG LQVXODWLRQ YROWDJH RI 9 506 FRPSO\LQJ ZLWK 8/ VWDQGDUGV)LOH UHI (3DFNDJH 72) LV 5R+6 FRPSOLDQW

D /E & dhZ ^

^K>hd D y/DhD Z d/E'^

3DUDPHWHU	6\PERO	9DOXH		8QLW
6WRUDJH MXQFWLRQ WHPSHUDWXUH UDQJH	7VWJ	7		
2SHUDWLQJ MXQFWLRQ WHPSHUDWXUH UDQJH	7M	7		
5HSHWLWLYH SHDN RII VWDWH YROWDJH 7M	9'50	7	9	
5HSHWLWLYH SHDN UHYHUVH YROWDJH 7M	9550	7	9	
506 RQ VWDWH FXUUHQW 7&	,7 506			$

1RQ UHSHWLWLYH VXUJH SHDN RQ VWDWH FXUUHQW IXOO F\FOH 7

,760

3HDN SXOVH YROWDJH 7M QRQ UHSHWLWLYH RII VWDWH),*	933			9

> dZ/ > , Z d Z7M^d/ X^QOHVV RWKHUZLVH VSHFLILHG

6\PERO	7HVW &RQGLWLRQ		4XDGUDQW			9DOXH
,*7	9' 9 5		0$;		P$	

KZ Z/E' /E&KZD d/KE

- __ 67 ___) %

-LH-LH 0LFURHOHFWURQLFV &R /WGpÀ –BD(Ì W D$/²4À$/²)Œ •7 'y…„G „À p€••p 0 r(P<, ' 0 • 0

),* 0D[LPXP SRZHU GLVVLSDWLRQ YHUVXV RQ VWDWH FXUUHQW

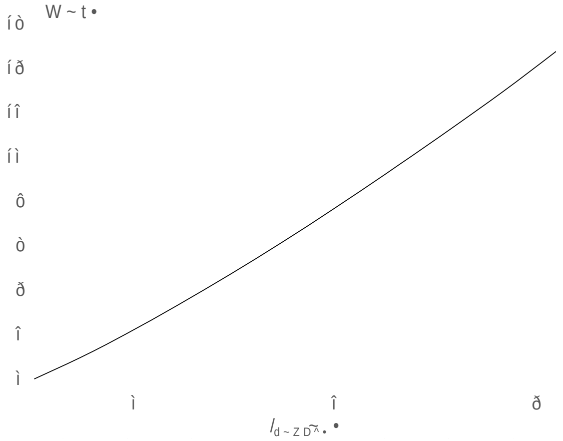

),* 5XV RQ6VWDWH FXUUHQW YHU WHPSHUDWXUH

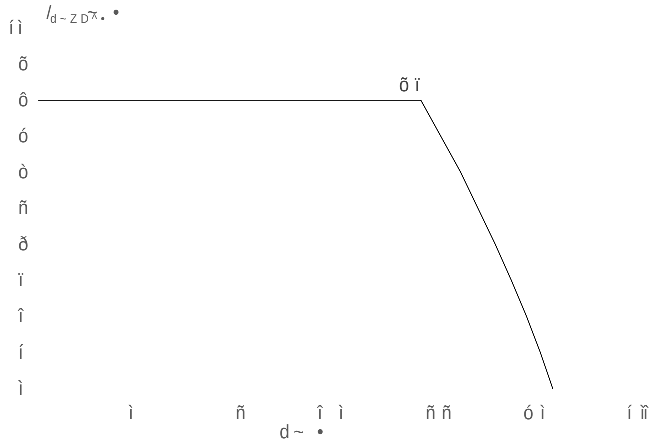

),* 6XUJH SHDN RQ VWDWH FXUUHQW YHUVXV QXPEHU RI F\FOHV

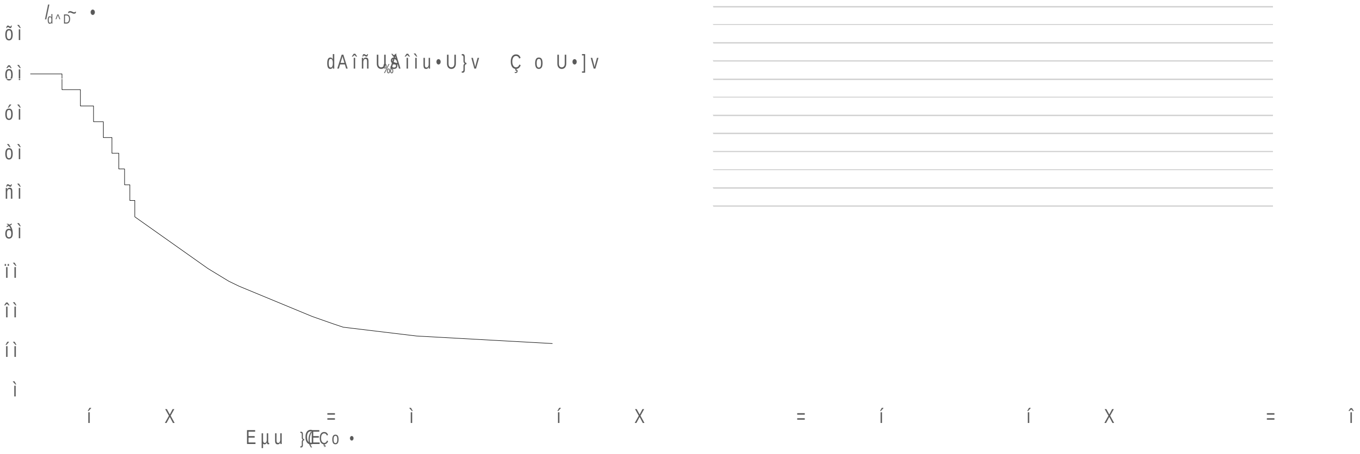

),* 2Q VWDWH FKDUDFWHULVWLF

),* Ö7HVW FLUFXLW IRU LQGXFWLYH DQG VWDQGDUG UHVLVWLYH O

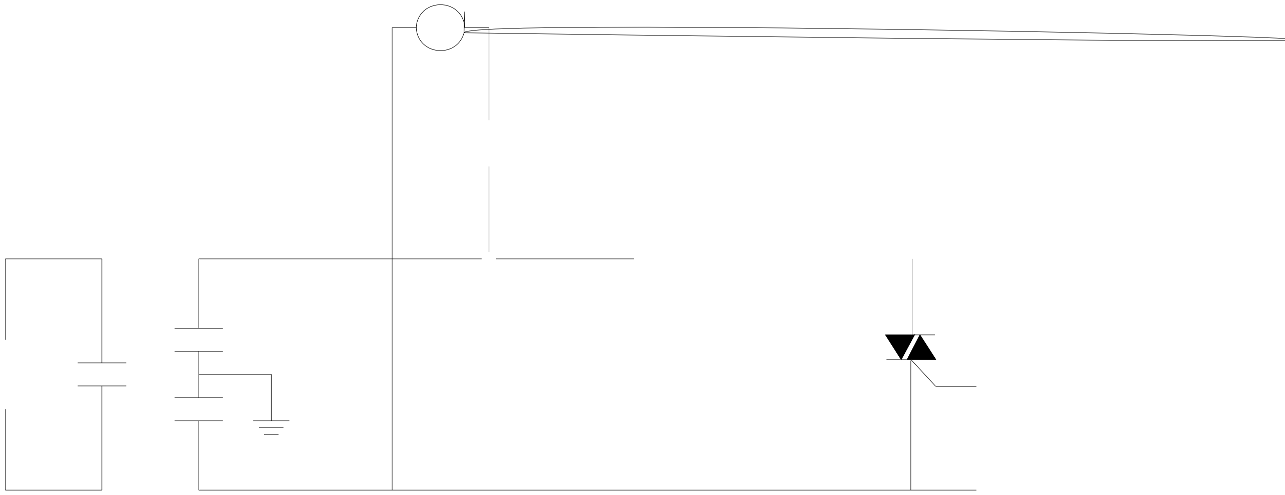

KZ Z/E' /E&KZD d/KE

2UGHU FR	9ROWDJ 9'50 9550 9	,*7 P$		3DFNDJ	%DVH 7 SFV	'HOLYHU\ PRGH
-67) %				72)	,QV	7XEH

'RFXPHQW 5HYLVLRQ +LVWRU\

'DWH	5HYLVLRQ	&KDQJHV
$SU	$	/DVW XSGDWHG
2FW	$	5HYLVH 3$&.$*(0(&+$1,&$/ '7

W < ' D , E/ > d

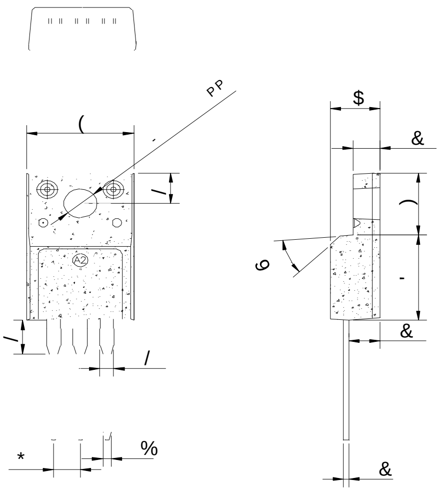

'LPHQVLRQV

5HI 0LOOLPHWHUV ,QFKHV

0LQ

,QIRUPDWLRQ IXUQLVKHG LV EHOLHYHG WR EH DFFXUDWH D
-LDQJVX -LH-LH 0LFURHOHFWURQLFV &R\ /WG DVVXPHV QR UHVSRQ
XVH ZLWKRXW FRQVLGHUDWLRQ IRU XVH EH\RQG LW ,
WKLV GRFXPHQW KDV EHHQ ZULWWHQ WR EH FKDQJHG ZKHQ DQ DJUHHPHQ
VLJQHG -LDQJVX -LH-LH ZLWK WKH DJUHHPHQW
3URGXFWV DQG LQIRUPDWLRQ GRFXPHQWHG KDYH QR LQIULQJ
-LDQJVX -LH-LH DVVXPHV QR UHVSRQVLELOLW\ IRU WKH LQIULQJHPHQW RI WK
SDUWLHV ZKLFK PD\ UHVXOW IURP LWV XVH 7KLV GRFXPH
VXSHUVHGHV DQG UHSODFHV DOO LQIRUPDWLRQ SUHYLRXV

LV D UHJLVWHUHG WUDGHPDUN RI -LDQJVX -LH-LH 0LFURHOHFWURQLFV &
&RS\ULJKW ‹ -LDQJVX -LH-LH 0LFURHOHFWURQLFV &R /WG $OO ULJKWV UHVHUYHG