JST134U-800D 1A TRIAC

Rev.A.2.1

The JST134U-800D triac is suitable for general purpose AC switching. It can be used as an ON/OFF function in applications such as heating regulation, induction motor starting circuits, for phase control operation in light dimmers, motor speed controllers. Package TO-92 is RoHS compliant.

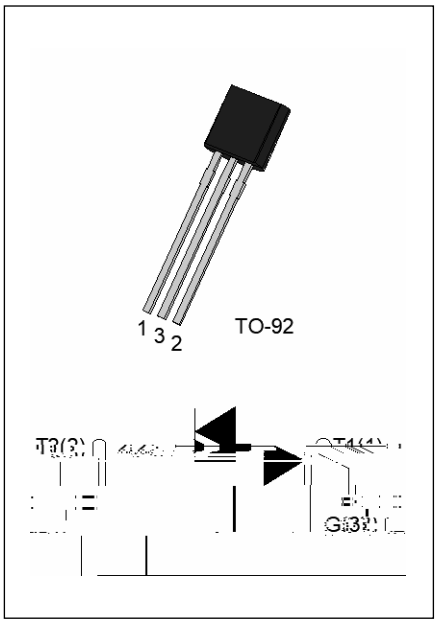

Symbol	Value	Unit
$I_{T(RMS)}$	1	A
V_{DRM} /V_{RRM}	800	V
I_{GT} / / /	5/5/5/10	mA

Parameter		Symbol	Value	Unit
Storage junction temperature range		T_{stg}	-40-150	
Operating junction temperature range		T_j	-40-125	
Repetitive peak off-state voltage (T_j=25)		V_{DRM}	800	V
Repetitive peak reverse voltage (T_j=25)		V_{RRM}	800	V
RMS on-state current ($T_C \leq$ 55)		$I_{T(RMS)}$	1	A
Non repetitive surge peak on-state current (full cycle , t_p=20ms , T_j=25)		I_{TSM}	25	A
Non repetitive surge peak on-state current (full cycle , t_p=16.6ms , T_j=25)			27.5	
I^2t value for fusing (t_p=10ms , T_j=25)		I^2t	3.125	A^2s
Critical rate of rise of on-state current (I_G=2 × I_{GT} , f=100Hz , T_j=125)	- -	dI/dt	50	A/μs
			30	
Peak gate current (t_p=20μs , T_j=125)		I_{GM}	2	A
Average gate power dissipation (T_j=125)		$P_{G(AV)}$	0.5	W
Peak gate power		P_{GM}	5	W
Peak pulse voltage (T_j=25 ; non-repetitive,off-state;FIG.7)		V_{pp}	3	kV

FIG.1: Maximum power dissipation versus RMS on-state current

FIG.2: RMS on-state current versus case temperat

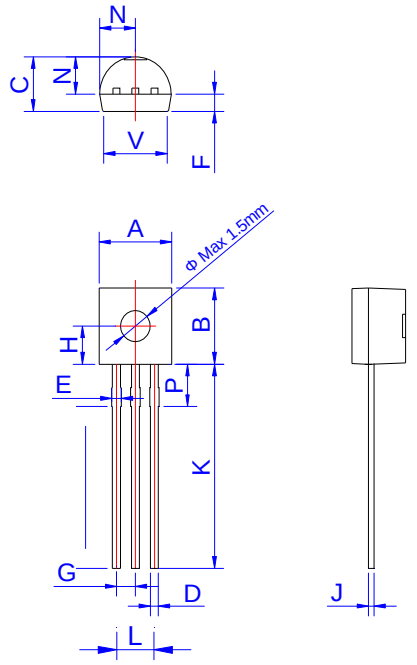

Ref.	Dimensions					
	Millimeters			Inches		
	Min.	Typ.	Max.	Min.	Typ.	Max.
A	4.45		5.20	0.175		0.205
B	4.32		5.33	0.170		0.210
C	3.18		4.19	0.125		0.165
D	0.407		0.533	0.016		0.021
E	0.50		0.70	0.020		0.028
F	1.10		1.30			0.051
G	1.10		1.40	0.043		0.055
H	2.20		2.40	0.087		0.094
J	0.36		0.50	0.014		0.020
K	12.70		15.0	0.500		0.591
N	2.04		2.66	0.080		0.105
P	1.80		2.30	0.071		0.091
V	4.10		4.50	0.161		0.177

Information furnished in this document is believed to be accurate and reliable. However, Jiangsu JieJie Microelectronics Co., Ltd. assumes no responsibility for the consequences of use without consideration for such information nor use beyond it. Information mentioned in this document is subject to change without notice, apart from that when an agreement is signed, Jiangsu JieJie complies with the agreement.
Products and information provided in this document have no infringement of patents. Jiangsu JieJie assumes no responsibility for any infringement of other rights of third parties which may result from the use of such products and information. This document supersedes and replaces all information previously supplied.
is a registered trademark of Jiangsu JieJie Microelectronics Co., Ltd.
Copyright © 2025 Jiangsu JieJie Microelectronics Co., Ltd. All rights reserved.